SKETCH-1

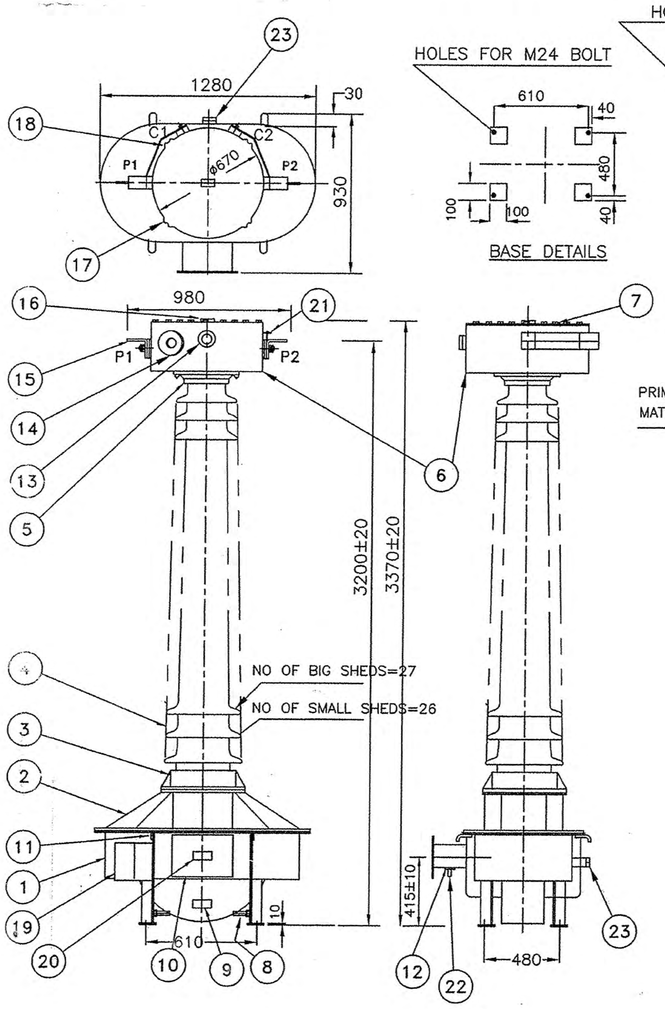

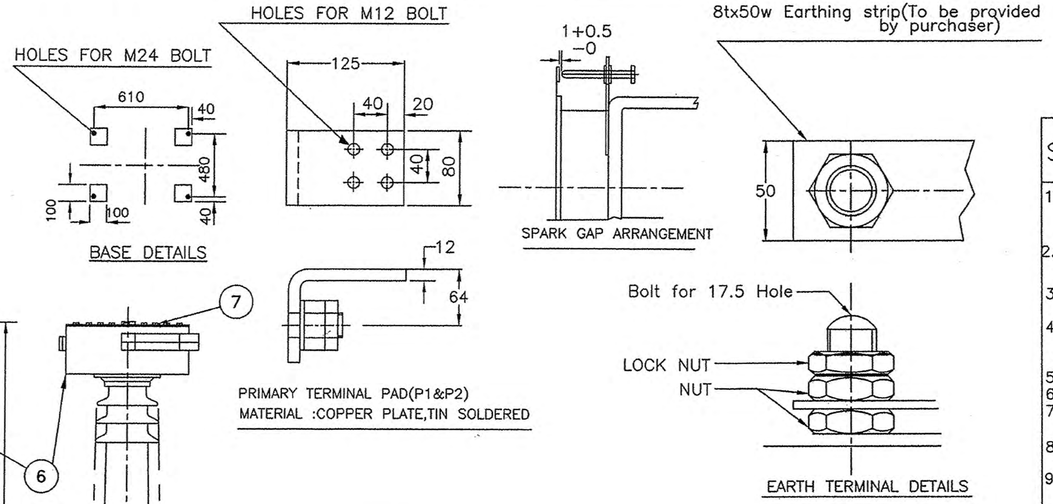

PART NO	DESCRIPTION	QTY	MATERIAL	REMARKS
1	LOWER TANK	1	MS	
2	UPPER TANK	1	MS	
3	LOWER METAL FITTING	1	MS	
4	PORCELAIN INSULATOR	1	–	BHEL MAKE
5	UPPER METAL FITTING	1	MS	
6	EXPANSION CHAMBER	1	MS	
7	EXPANSION CHAMBER COVER	1	MS	
8	EARTH TERMINAL	2	MS	
9	OIL DRAINING ARRANGEMENT	1	MS	
10	TERMINAL BOX & COVER	1	MS	
11	LIFTING LUG	4	MS	
12	GLAND PLATE	1	MS	
13	OIL LEVEL SIGHT WINDOW	1	MS	GLASS/ACRYLIC
14	PRESSURE RELIEF DEVICE	1	MS	
15	PRIMARY TERMINAL	4	CU PLATE	
16	OIL&N2 FILLING ARRANGEMENT	1	MS	
17	SLING GIDE	4	MS	
18	PRIMARY RE-CONNECTION LINK	2	CU PLATE	
19	RATING PLATE	2	ANODISED ALUM.	HINDI&ENGLISH VERSIONS
20	CAUTION PLATE	1	ANODISED ALUM.	
21	SPARK GAP ARRANGEMENT	1	BRASS	
22	CABLE GLAND SUITABLE FOR 4SQ MM x4 CORE CABLE	1	BRASS	
23	TEST TAP	1	–	FOR MEASUREMENT OF TAN DELTA/CAPACITANCE

SCHEDULE OF GUARANTEED PERFORMANCE-TECHNICAL AND OTHER PARTICULARS

1. STANDARD GOVERNING SPECIFICATION: RDSO SP.NO ETI/-PSI/117(7/88) WITH A/C SLIPNO 1~9&IS2705
2. MANUFACTURE'S TYPE DESIGNATION :NPOULV-R

3a.NOMINAL SYSTEM VOLTAGE :220kV
b.HIGHEST SYSTEM VOLTAGE :245kV
4a.RATED PRIMARY CURRENT 200-100A
b.RATED SECONDARY CURRENT :5A
C.RATED TRANSFORMATION RATIO:200-100/5
5. RATED BURDEN :30VA
6. ACCURACY CLASS :5P
7. RATED ACCURACY LIMIT FACTOR :15
8. CURRENT ERROR AT RATED PRIMARY CURRENT :
9. PHASE DISPLACEMENT AT RATED PRIMARY CURRENT :
10.COMPOSITE ERROR AT RATED ACCURACY LIMIT PRIMARY CURRENT :
(8–10: AS PER IS:2705)
11.RATED SHORT TIME CURRENT AND DURATION
a.THERMAL(Ith) :31.5kA(rms) FOR 1 SEC.
b.DYNAMIC(Idyn) : 78.75kA (PEAK)
12.TEMP.RISE OF THE WINDINGS (BY RESISTANCE METHOD)OVER AN AMBIENT TEMP.OF 45°C AT RATED CURRENT TILL STEADY STATE FOLLOWED BY 150%OF FULL LOAD FOR 15 MINUTES AS PER CLAUSE 10.1.2 OF RDSO SPECIFICATION. 50°C
13.PARTIAL DISCHARGE LEVEL : 10PC
14.PARTICULARS OF WINDINGS:
a.PRIMARY WINDINGS (MATERIAL:COPPER)
i.TYPE : WOUND
ii.NO.OF TURNS : 4
iii.CURRENT DENSITY AT RATED CURRENT : 2A/mm2
iv.SIZE OF CONDUCTOR :1x25 STRIP, 8NOS
v.CLASS OF INSULATION : A
vi.INSULATION MATERIALS USED :KRAFT PAPER
b SECONDARY WINDINGS (MATERIAL:COPPER)
i.TYPE :WOUND ON RING CORE
ii.NO.OF TURNS : 160T
iii.CURRENT DENSITY AT RATED CURRENT : 1.4A/mm2
iv.SIZE OF CONDUCTOR : 2.2ø
v.CLASS OF INSULATION : A
RESISTANCE COMPUTED TO 75°C : 0.5ohm
vii.INSULATING MATERIAL USED :KRAFT PAPER
C. RATED INSULATION LEVELS
i.ONE MINUTE POWER FREQUENCY WITHSTAND VOLTAGE : 460kV(rms)
ii.INTERSECTION WITHSTAND VOLTAGE OF PRI.WINDING : 2kV(rms)
iii.IMPULSE WITHSTAND VOLTAGE :1050kV(PEAK)
15. PARTICULARS OF CORE
i.TYPE :TORROIDAL RING CORE
ii.FLUX DENSITY
a.AT RATED PRI.CURRENT: 0.1 TESLA
b.AT 15TIMES RATED PRI.: 1.5 TESLA CURRENT
iii.THICKNESS OF STEEL LAMINATIONS :0.27~0.35mm
iv.WHETHER CRGO STEEL STAMPINGS ARE USED : TORROIDAL WOUND CORES ARE USED
v.WATT LOSS/kg,OF STEEL (AT 50Hz) :0.0072(FOR0.1 TESLA)
vi.KNEE POINT e.m.f. :100V
vii.EXCITING CURRENT AT KNEE POINT e.m.f. :250mA
16.PARTICULARS OF PORCELAIN HOUSING/BUSHING:-
i.SPECIFICATION : IS:5621
ii.NAME OF MANUFACTURER : BHEL
iii.POWER FREQUENCY WITHSTAND VOLTAGE FOR ONE MINUTE
a.DRY : 460kV(rms)
b.WET : 460kV(rms)
iv.DRY LIGHTNING IMPULSE WITHSTAND VOLTAGE,1.2/50 MICRO-SEC.WAVE SHAPE :1050kV(PEAK)
v.CREEPAGE DISTANCE IN AIR
a.PROTECTED :2350mm
b.TOTAL 6125mm
vi.Wt.OF PORCELAIN HOUSING/ BUSHING :250kg(APPROX)
17.OVERALL DIMENSIONS
i.LENGTH :1280mm
ii.WIDTH :930mm
iii.HEIGHT :3375mm
18.WEIGHT
i.TOTAL Wt.OF COPPER USED
a.PRIMARY WINDING : 50kg
b.SECONDARY WINDING : 2.5kg
ii.Wt.OF CORE : 20kg
iii.QTY OF INSULATING OIL : 240L
Wt.OF INSULATING OIL : 214kg
iv.TOTAL WEIGHT : 1000kg
19.PARTICULARS OF TERMINAL CONNECTOR
i.NAME OF MANUFACTURER
ii.RATED CURRENT : 800A
iii.TEMPERATURE RISE ABOVE AMBIENT OF 45°C
a.AT RATED CURRENT
b.AT 150%OF RATED CURRENT FOR 15 MINUTES
(FROM RDSO/CORE APPROVED SOURCE)

SKETCH-4

CURRENT TRANSFORMER

REF .IS 2705 [PARTS I &III]–1981

RDSO SP. NO. ETI/PSI/117(7/88) WITH A/C SLIP NO.1,2,3,4&5

TYPE	NPOULV	FORM	R
FREQUENCY	50 Hz	OIL QUANTITY	35 L
INS.LEVEL	275/650 KV	WEIGHT	300 KG
HIGHEST SYSTEM VOLTAGE			145 KV
SHORT–TIME CURRENT			31.5 /1Sec.
PURCHASE ORDER NO.	028392 dt.20–08–1991		
MAKER'S SER. NO.	[redacted]	YEAR	[redacted]

CORE	PROTECTIVE
VA	30
ACCURACY CLASS	5P
ALF	15
CURRENT RATIO	400–200/5
MIN.KNEE–POINT VOLTAGE(Vkp)	100 V
MAX.EXCITING CURRENT AT Vkp	500 mA
MAXIMUM SECONDARY WINDING RESISTANCE AT 75°C	0.3 OHM

PRIMARY CONNECTION	TEST TERMINALS	SECONDARY TERMINALS	CURRENT RATIO
P1–C1 C2–P2	–	S1 . S2	400/5
C2–C1	–	S1 . S2	200/5
–	T1 . T2	S1 .. S2	10/5

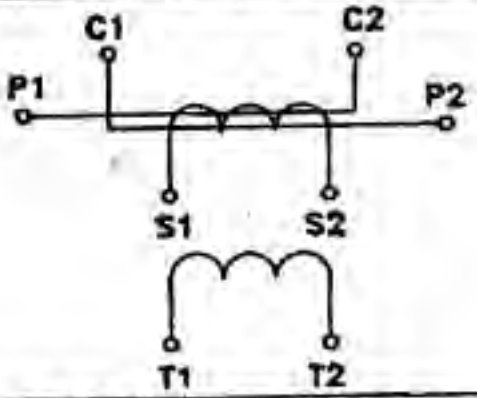

TEST TERMINALS (T1,T2) SHOULD BE KEPT OPEN IN SERVICE

TRANSFORMERS AND ELECTRICALS KERALA LIMITED

ANGAMALLY KERALA

MADE IN INDIA TK319151

REVALIDATED			
CHD			20 7 95
APPD			20 7 95

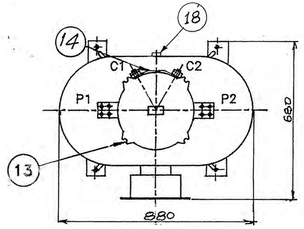

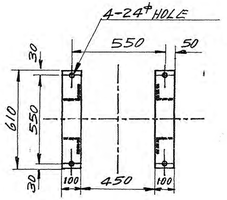

BASE DETAILS

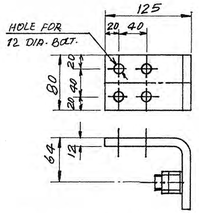

PRI. TERMINAL PAD(P1&P2)
MATERIAL: COPPER PLATE TIN SOLDERED

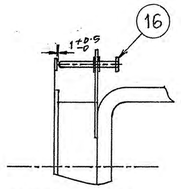

SPARK GAP DETAILS

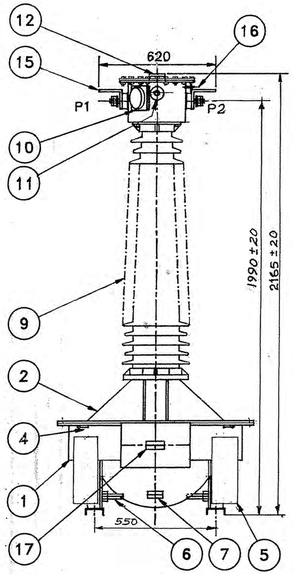

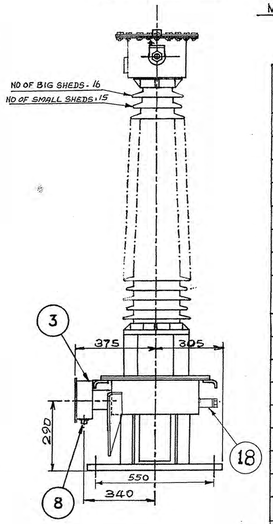

PART NO	DESCRIPTION	QUANTITY NOs	REMARKS
1	LOWER TANK	1	MILD STEEL
2	UPPER TANK	1	MILD STEEL
3	SEC. TERMINAL BOX	1	MILD STEEL
4	LIFTING LUG	4	MILD STEEL
5	RATING PLATE	2	ANODISED ALUMINIUM
6	EARTH TERMINAL	2	REF. TK 319828
7	OIL DRAIN ARRANGEMENT	1	MILD STEEL
8	CABLE GLAND	1	SUITABLE FOR 4Sq.mm 4CORE ARMD. CABLE
9	PORCELAIN INSULATOR	1	BHEL MAKE
10	PRESSURE RELIEF DEVICE	1	MILD STEEL
11	OIL LEVEL INDICATOR	1	PRISMATIC GLASS
12	OIL&NITROGEN FILLING ARRANGEMENT	1	MILD STEEL
13	SLING GUIDE	4	MILD STEEL
14	PRIMARY RE-CONNECTION LINK	2	COPPER
15	PRIMARY TERMINAL	4	COPPER
16	ARCING ROD	1	BRASS
17	CAUTION PLATE	1	ANODISED ALUMINIUM
18	TEST TAP	1	FOR MEASUREMENT OF TAN DELTA/CAPACITANCE

SCHEDULE OF GUARANTEED PERFORMANCE, TECHNICAL & OTHER PARTICULARS (132kV CT)

1. STANDARD GOVERNING SPECIFICATION: RDSO SP.NO. ETI/PSI/117(7/88) WITH A/C SLIP NO 1,2,3,4&5 & IS 2705
2. MANUFACTURER'S TYPE DESIGNATION: NPOULV-R
3. a NOMINAL SYSTEM VOLTAGE: 132 kV
   b HIGHEST SYSTEM VOLTAGE: 145 kV
4. a RATED PRIMARY CURRENT: 400-200 A
   b. RATED SECONDARY CURRENT: 5 A
   c RATED TRANSFORMATION RATIO: 400-200/5
5. RATED BURDEN: 30 VA
6. ACCURACY CLASS: 5P
7. RATED ACCURACY LIMIT FACTOR: 15
8. CURRENT ERROR AT RATED PRIMARY CURRENT
9. PHASE DISPLACEMENT AT RATED PRIMARY CURRENT — AS PER IS:2705
10. COMPOSITE ERROR AT RATED ACCURACY LIMIT PRIMARY CURRENT
11. RATED SHORT TIME CURRENT AND DURATION.
    a. THERMAL (Ith): 31 kA(RMS) FOR 1 SEC
    b. DYNAMIC (Idyn): 78.75 kA(PEAK)
12. TEMPERATURE RISE OF WINDINGS (BY RESISTANCE METHOD) OVER AN AMBIENT TEMPERATURE OF 45°C AT RATED CURRENT TILL STEADY STATE FOLLOWED BY 150% OF FULL LOAD FOR 15 MINUTES AS PER CLAUSE 10.1.2 OF RDSO SPECIFICATION — 50°C
13. PARTIAL DISCHARGE LEVEL: 10 PC
14. PARTICULARS OF WINDINGS.
    a. PRIMARY WINDING: (MATERIAL : COPPER)
       i TYPE: WOUND
       ii NO. OF TURNS: 2
       iii CURRENT DENSITY AT RATED CURRENT: 2A/mm²
       iv SIZE OF CONDUCTOR: 1x25 STRIP 8 NOS
       v. CLASS OF INSULATION: A
       vi INSULATION MATERIALS USED: KRAFT PAPER
    b. SECONDARY WINDINGS. (MATERIAL : COPPER)
       i TYPE: WOUND
       ii NO. OF TURNS: 160T
       iii CURRENT DENSITY AT RATED CURRENT: 2A/mm²
       iv SIZE OF CONDUCTOR: 2.2 DIA
       v CLASS OF INSULATION: A
       vi RESISTANCE COMPUTED TO 75°C: 0.5 OHM
       vii INSULATING MATERIALS USED: KRAFT PAPER.
    c. RATED INSULATION LEVELS.
       i ONE MINUTE POWER FREQUENCY WITHSTAND VOLTAGE: 275 kV RMS
       ii INTER-SECTION WITHSTAND VOLTAGE OF PRIMARY WINDING: 2 kV RMS
       iii IMPULSE WITHSTAND VOLTAGE: 650 kV PEAK
15. PARTICULARS OF CORE.
    a. TYPE: TORROIDAL RING CORE.
    b. FLUX DENSITY:
       i AT RATED PRIMARY CURRENT: 0.1 TESLA.
       ii AT 15 TIMES RATED PRIMARY CURRENT: 1.5 TESLA.
    c. THICKNESS OF STEEL LAMINATIONS: 0.27 TO 0.35 MM
    d. WHETHER CRGO STEEL STAMPINGS ARE USED: TORROIDAL WOUND CORE ARE USED.
    e. WATT LOSS PER KG. OF STEEL (AT 50Hz): 0.0072 FOR 0.1 TESLA.
    f. KNEE-POINT emf: 100 V
    g. EXCITING CURRENT AT KNEE-POINT emf: 500 mA
16. PARTICULARS OF PORCELAIN HOUSING/BUSHING.
    a. SPECIFICATIONS TO WHICH IT CONFORM: IS:5621
    b. NAME OF MANUFACTURER: BHEL
    c. POWER FREQUENCY WITHSTAND VOLTAGE FOR 1 MINUTE.
       i DRY: 275 kV RMS.
       ii WET: 275 kV RMS
    d. DRY LIGHTNING IMPULSE WITHSTAND VOLTAGE (1.2/50 MICRO-SECOND WAVE SHAPE): 650 kV (PEAK)
    e. CREEPAGE DISTANCE IN AIR.
       i PROTECTED: 1430 mm
       ii TOTAL: 3625 mm
    f. WEIGHT OF PORCELAIN HOUSING: 90 kg (APPROX)
17. OVERALL DIMENSIONS.
    a. LENGTH: 880 mm
    b. WIDTH: 680 mm.
    c. HEIGHT: 2160 mm
18. WEIGHTS.
    a. TOTAL WEIGHT OF COPPER USED.
       i PRIMARY WINDING: 23 kg
       ii SECONDARY WINDING: 1.5 kg.
    b. WEIGHT OF CORE: 13 kg.
    c. QUANTITY OF INSULATING OIL. 35 L
       ii WEIGHT OF INSULATING OIL 32 kg

SKETCH-3

    d. TOTAL WEIGHT: 300 kg.
19. PARTICULARS OF TERMINAL CONNECTORS:
    a. NAME OF MANUFACTURER:
    b. RATED CURRENT: 800 A
    c. TEMPERATURE RISE OVER AN AMBIENT OF 45°C
       i AT RATED CURRENT
       ii AT 130% OF RATED CURRENT FOR 15 MINUTES. } FROM RDSO/CORE APPROVED SOURCE.

SKETCH-2

CURRENT TRANSFORMER

REF.IS 2705 [LATEST VERSION]

RDSO SP. NO. ET/PSI/117(7/88) WITH A/C SLIP NO.1~9

TYPE	NPOULV	FORM	R
FREQUENCY	50 Hz	OIL QUANTITY	240 L
INS.LEVEL	460/1050 kV	WEIGHT	1000 kg
HIGHEST SYSTEM VOLTAGE			245 kV
SHORT-TIME CURRENT			31.5kA/1Sec.

PURCHASE ORDER NO

MAKER'S SER. NO. YEAR

CORE	PROTECTIVE
VA	30
ACCURACY CLASS	5P
ALF	15
CURRENT RATIO	200-100/5

PRIMARY CONNECTION	TEST TERMINALS	SECONDARY TERMINALS	CURRENT RATIO
P1 - C1 C2 - P2	-	S1 . S2	200/5
C2 - C1	-	S1 . S2	100/5
-	T1 . T2	S1 . S2	10/5

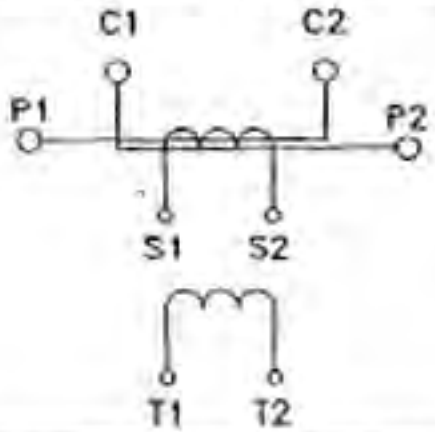

TEST TERMINALS (T1,T2) SHOULD BE KEPT OPEN IN SERVICE

TRANSFORMERS AND ELECTRICALS KERALA LIMITED

ANGAMALLY KERALA

MADE IN INDIA TK335701